TECHNICAL DATA

DesignMax DM5SE
surface-mounted loudspeaker

Product Overview

With coaxial two-way drivers, the 60-watt DesignMax DM5SE loudspeaker offers rich lows and clear, intelligible highs — along with premium aesthetics that complement any commercial sound installation. The DM5SE features a two-way 5.25-inch woofer and 1-inch coaxial tweeter mounted within the Dispersion Alignment system, delivering a frequency range of 65 Hz – 20 kHz. The DM5SE is surface-mounted, IP55 outdoor-rated, and locks onto a hidden QuickHold U-bracket for fast, secure installation.

Key Features

Combine DesignMax models to complete any design, big or small — 12 loudspeakers to mix and match, from 2-inch, low-profile models to 8-inch, high-SPL compression-driver loudspeakers and outdoor-rated options

Deliver rich lows and clear, intelligible highs with coaxial two-way drivers — no DSP or EQ required. For even better sound, use select Bose DSPs and amplifiers to enable Bose loudspeaker EQ and SmartBass processing, which expands performance and response at any listening level

Ensure a consistent listening experience throughout the room with the Dispersion Alignment system, which matches the coverage of the woofer to the pattern of the tweeter

Blend with any room design with elegant form factor, minimum-bezel grilles available in black or white, and removable logos

Reduce installation time with the patented QuickHold mounting system, which also reduces strain, hassle, and the chance of product damage

Install easily with industry-standard accessories — all models include Euroblock connectors; in-ceiling models include plenum-rated backcans, tile bridges, and front-access audio wiring that makes installation and troubleshooting easier

Install DM5SE outside — IP55 rating with standard aluminum grille for outdoor use

Technical Specifications

SINGLE LOUDSPEAKER PERFORMANCE		
Frequency Response (–3 dB) (1)	73 – 17,000 Hz	
Frequency Range (–10 dB) (1)	65 – 20,000 Hz	
Nominal Coverage (1 – 4 kHz)	135° conical	
Nominal Coverage Angle (1 – 10 kHz)	130° conical	
	AES component test (4)	**Bose extended-lifecycle test (5)**
Power Handling, long-term continuous	60 W	50 W
Power Handling, peak	240 W	200 W
Sensitivity (SPL/ 1W @ 1 m) (2)	89 dB	89 dB
Calculated Maximum SPL @ 1 m (3)	107 dB	106 dB
Calculated Maximum SPL @ 1 m, peak	113 dB	112 dB
Crossover	1.8 kHz (passive 2-way crossover)	
Loudspeaker EQ	Not Required, Bose EQ voicing and SmartBass Processing available	
Recommended High-Pass Protection	65 Hz with recommended 24 dB / octave filter	
Overload protection	Resistor-network power reduction with automatic reset	
Transformer taps	70V: 3, 6, 12, 25, 50 W, bypass 100V: 6, 12, 25, 50 W, bypass	
TRANSDUCERS		
Low Frequency	1 x 133 mm woofer (5.25-inch), weather treated	
High Frequency	1 x 25 mm (1-inch) neodymium dome tweeter, coaxially mounted, weather-treated	
Technology	Dispersion Alignment System, 165 mm (6.5 in) system diameter	
Nominal Impedance	8 ohms (transformer bypass)	

DesignMax DM5SE
surface-mounted loudspeaker

PHYSICAL	
Enclosure Material	Engineered plastics, highly UV fade resistant
Bracket Material	Powder-coated steel
Grille	Perforated aluminum with a powder coat finish, tamper-resistant design, paintable
Logo	Rotatable, removable
Color	Black: RAL 9005, White: Bose Arctic White, similar to RAL 9003, Paintable
Environmental / Ingress-Protection	Outdoor per IEC 529 IP55 (suitable for use outdoors in wet locations), includes aluminum grille to prevent red corrosion and weather resistant input cover
Safety Agency	UL-1480A, S5591/UL listed, NFPA701, CE compliant
Operating Temperature Range	-25 °C to 70 °C (-13 °F to 158 °F)
Connectors	Euroblock 6-pin connector with loop-through, mounted on rear. Accepts 18 AWG (0.8 mm^2) to 14 AWG (2.5 mm^2) size wire
Suspension / Mounting	QuickHold Mounting System with included U-Bracket
	4 preset mounting angles: 0°, 15°, 30°, 45° for wall or ceiling placement
	Two (2) rear M8 screw inserts for use with optional pan & tilt bracket and one (1) rear M8 screw insert for safety-tether attachment
Dimensions (H × W × D)	286 × 192 × 197 mm (11.2 × 7.5 × 7.7 in)
Dimensions (H × W × D) with bracket	286 × 192 × 215 mm (11.2 × 7.5 × 8.4 in)
Net Weight, Loudspeaker with grille (single)	4.38 kg (9.7 lb)
Shipping Weight (pair)	11.4 kg (25.2 lb)
Included Accessories	U-Bracket, powder-coated steel
Optional Accessories	Pan & Tilt Bracket
PRODUCT CODES	
829705-0110	DESIGNMAX DM5SE PAIR BLK
829705-0210	DESIGNMAX DM5SE PAIR WHT

Footnotes
(1) Frequency response and range measured on-axis in half-space environment with Bose EQ voicing
(2) Sensitivity measured on-axis in half-space environment averaged 100 Hz – 10 kHz using recommended High-Pass protection
(3) Maximum SPL calculated from sensitivity and power handling specifications, exclusive of power compression.
(4) AES standard 2-hour duration with IEC system noise
(5) Bose extended-lifecycle test using pink noise filtered to meet IEC268-5, 6-dB crest factor, 500-hour duration.
(6) Measured in whole-space environment

For additional specifications and application information, please visit PRO.BOSE.COM.
Specifications subject to change without notice. 09/2020

DesignMax DM5SE
surface-mounted loudspeaker

On-Axis Frequency Response

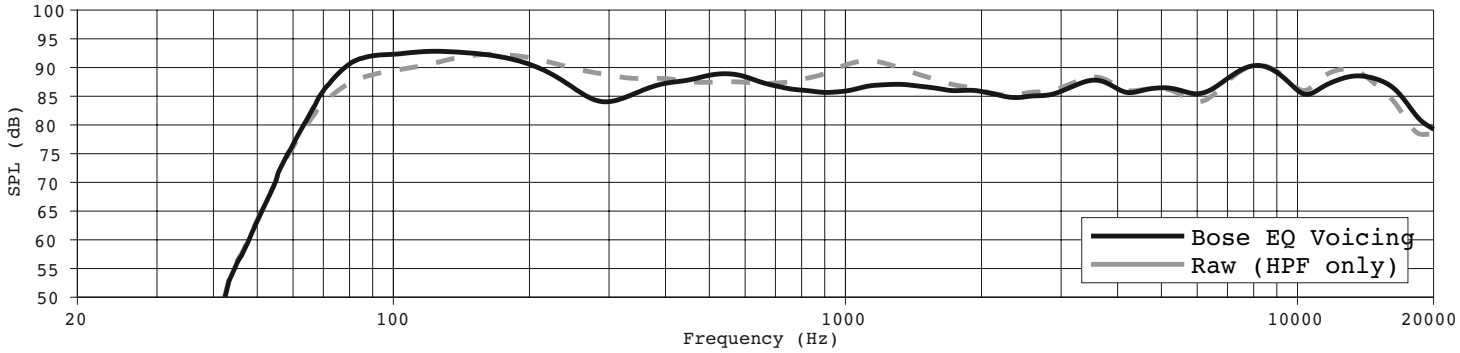

Impedance

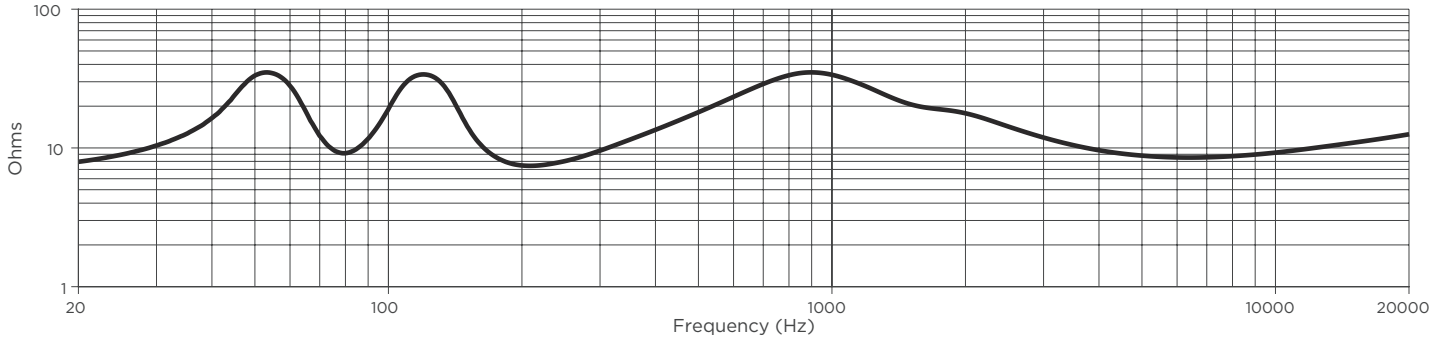

Beamwidth [6]

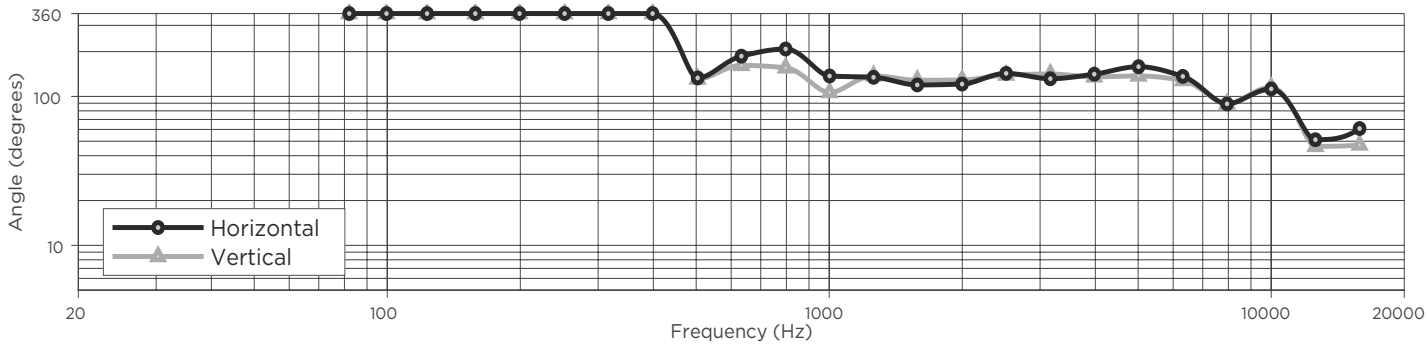

For additional specifications and application information, please visit PRO.BOSE.COM.
Specifications subject to change without notice. 09/2020

DesignMax DM5SE
surface-mounted loudspeaker

Dimensions

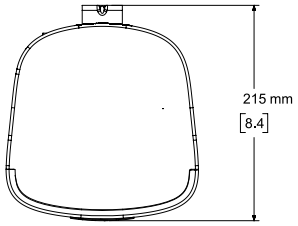

Top View

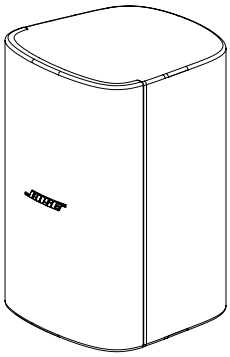

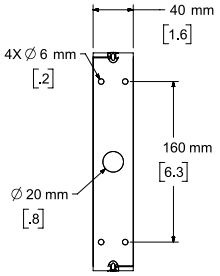

Rear View
BRACKET ONLY

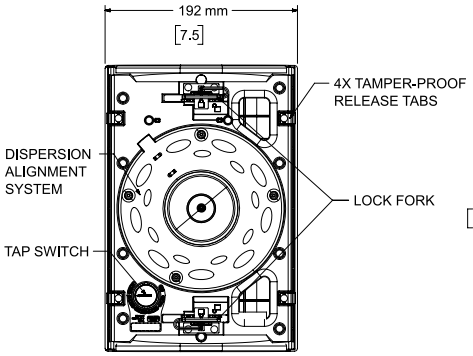

Front View
GRILLE REMOVED FOR CLARITY

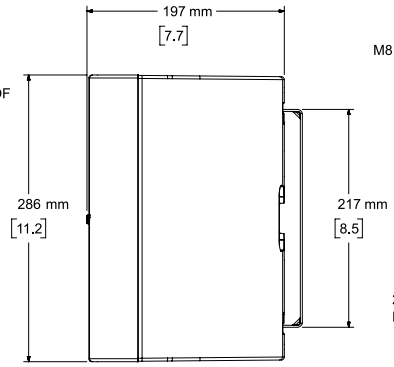

Right View
DIMENSIONS APPLY TO BOTH SIDES

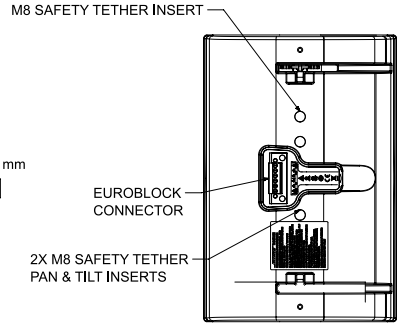

Rear View
BRACKET/INPUT COVER REMOVED FOR CLARITY

NOTES:
1. DIMENSIONS ARE IN MILLIMETERS OVER INCHES
2. WEIGHT APPROX 4.38kg [9.7lbs] (SPEAKER ONLY)
   WEIGHT W/BRACKET APPROX 4.75kg [10.5lbs]

For additional specifications and application information, please visit PRO.BOSE.COM.
Specifications subject to change without notice. 09/2020